1 INSTANTANEOUS HOT WATER HEATER

SCALE: NTS

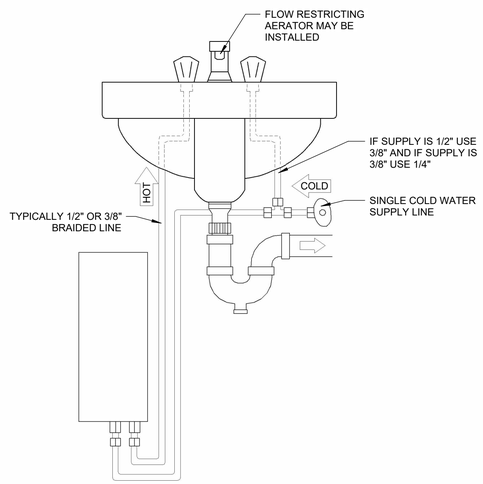

NOTES:
1. UNIT IS PERMANENTLY WIRED TO ELECTRICAL SYSTEM

2 WALL PIPE PENETRATION

SCALE: NTS

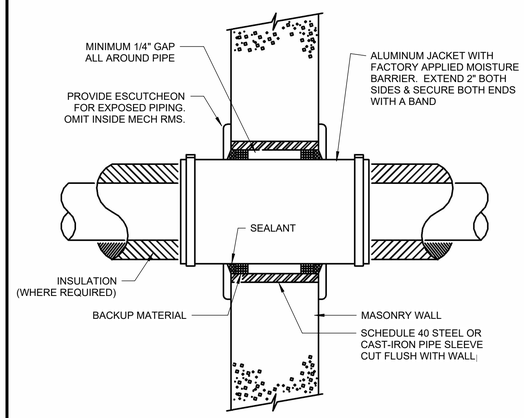

NOTES:
1. FOR GYP. BOARD WALLS PROVIDE MIN. 16 GAUGE GALV. STEEL SLEEVE W/ LOCK TYPE LONGITUDINAL SEAM
2. OMIT ALUMINUM JACKET IF PIPING IS UNINSULATED

3 DUCT PENETRATION

SCALE: 12" = 1'-0"

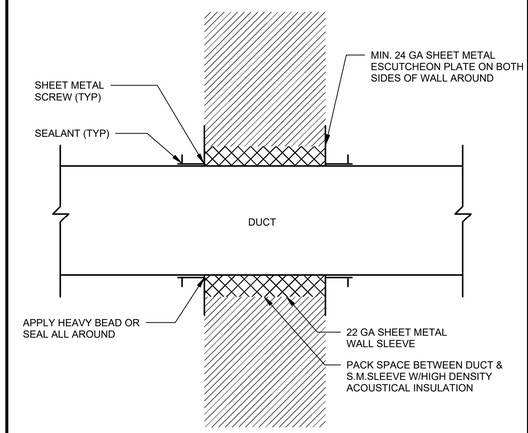

NOTE:
1. AT EXTERIOR WALLS FLASH & SEAL PENETRATION WEATHERTIGHT

TETRA TECH
ENGINEERING BUSINESS NO. 2429
www.tetratech.com
10600 CHEVROLET WAT, SUITE 300
ESTERO, FL 33928
TEL: (239) 390-1467 FAX: (239) 390-1769

BID SET

CITY OF SANIBEL
800 Dunlop Road
Sanibel, Florida 33957

MARK	DATE	DESCRIPTION	BY
1	01/13/2026	20260113_UPDATED DRAWING	

CITY OF SANIBEL, FLORIDA
DONAX WATER RECLAMATION FACILITY
POST HURRICANE IAN REPAIRS & HARDENING
MECHANICAL AND PLUMBING DETAILS

PROJ:	200-08498-25001
DESN:	F. AL TWAL
DRWN:	T. SOE
CHKD:	L. RAMIREZ

MP-501

SCALE: 1/4" = 1'-0"

Bar measures 1 inch, otherwise drawing is not to scale

Copyright: Tetra Tech

1/13/2026 3:53:59 PM Autodesk Docs://200-08498-25001 Donax WRF Post Ian/M-DonaxWRF_IAN SCADA Improvements.rvt